# **BallSaver** instructions

**Description**: This device allows replay of a ball if that ball drains before an allotted and adjustable time. It is suitable for many Williams, Gottlieb, Bally, and other electronic pinball machines with either single or multiball operation that do not have ball replay as part of their original factory programming. For correct operation, the ball drain switch must be mechanical (leaf spring switch) and not a photocell switch. Installation is straightforward using wire clips attached to pre-defined playboard locations. It requires that one wire be cut in the playfield on the drain switch.

**Basic installation instructions**: Please read this entire document before proceeding with installation. Be sure to turn off the game power where designated. Installation may require removal of the playfield glass and lower playfield apron. (The apron is the lower metal cover on top of the playfield which covers the drain switch and kickout coil). Care must be taken in these removals as we cannot be responsible for any damages that might occur to your machine during installation or use of this device. If you are not certain how to complete the installation, please contact a professional to assist you.

**Step 1:** Connecting the ground and kickout coil connections

1.1 Connect the green wire clip from the BallSaver box to the kickout coil grounding switch wire connection. This connection on the kickout coil is not shared with other coils and typically is connected by only one wire. Thie kickout coil is the coil that kicks the ball to the outlane where it is hit by the plunger to start gameplay. See Figures 1 & 2 showing the green wire and clip. If a diode is present across the coil, the correct side for this green wire clip is the same as the non-banded side of the attached diode. An incorrect connection may damage the BallSaver or game fuse. One spare fuse is located inside the BallSaver box lid.

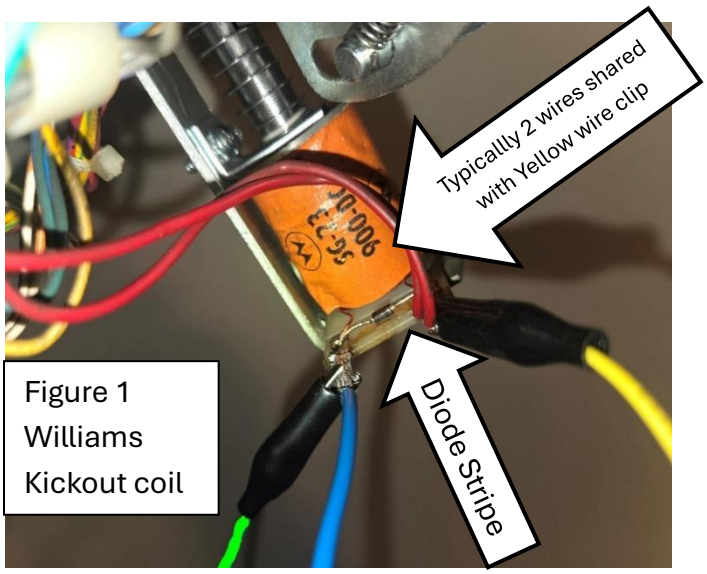


Figure 1
Williams
Kickout coil

1.2 Connect the yellow wire clip to the kickout coil power (typically connected by two wires which are shared with other coils.) This is the remaining connection to the kickout coil to which you just attached the green wire. See Figures 1 & 2 & 3.

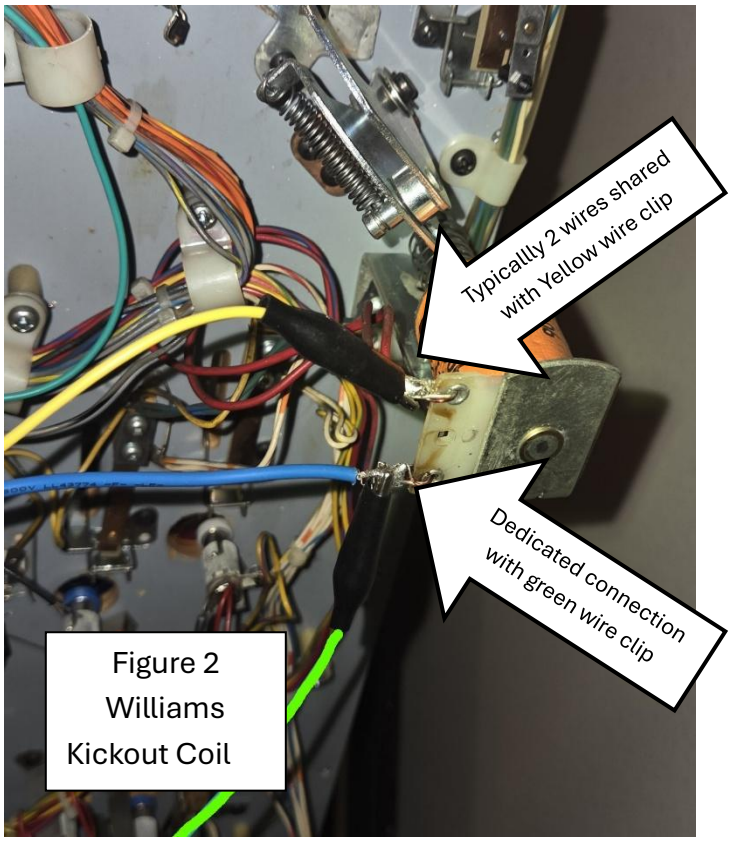


Figure 2
Williams
Kickout Coil

Note in the case of this Bally machine, the kickout coil is under the apron of the machine and on top of the playfield. However, the connections to this coil can still be reached from under the playfield.

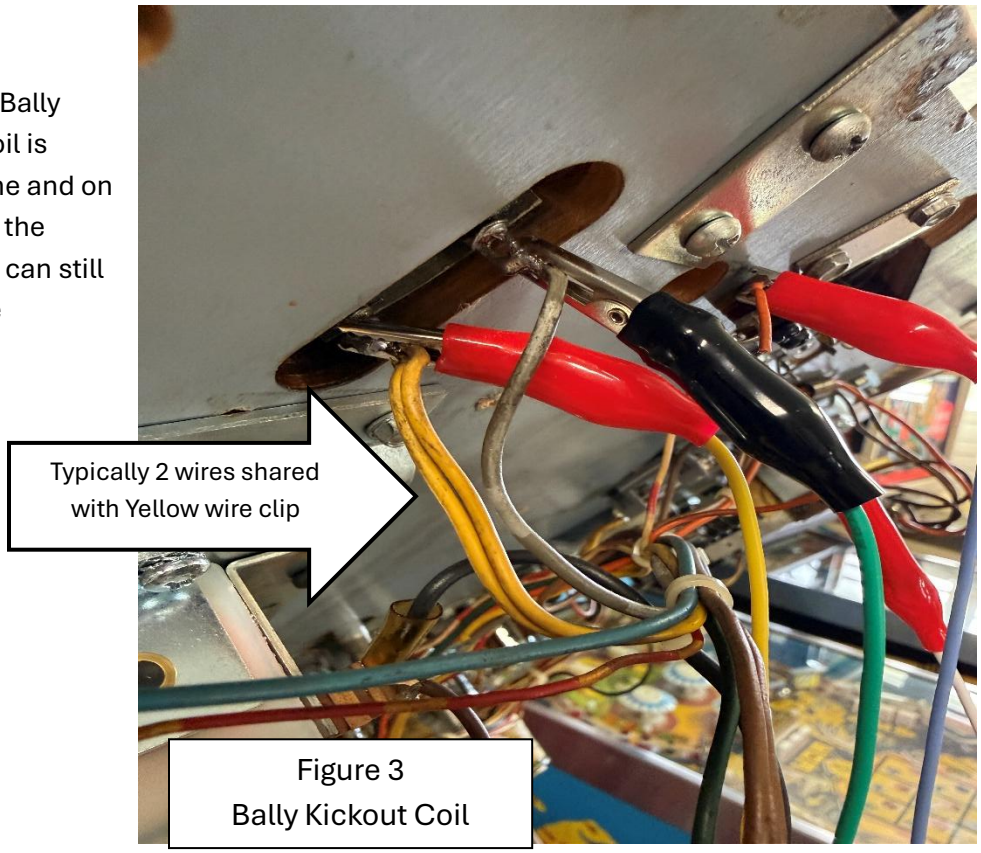


Figure 3
Bally Kickout Coil

1.3 Connect the clip on the black wire to ground. Use a braided ground strap, ground buss, or other metal ground connection. See Figure 4.

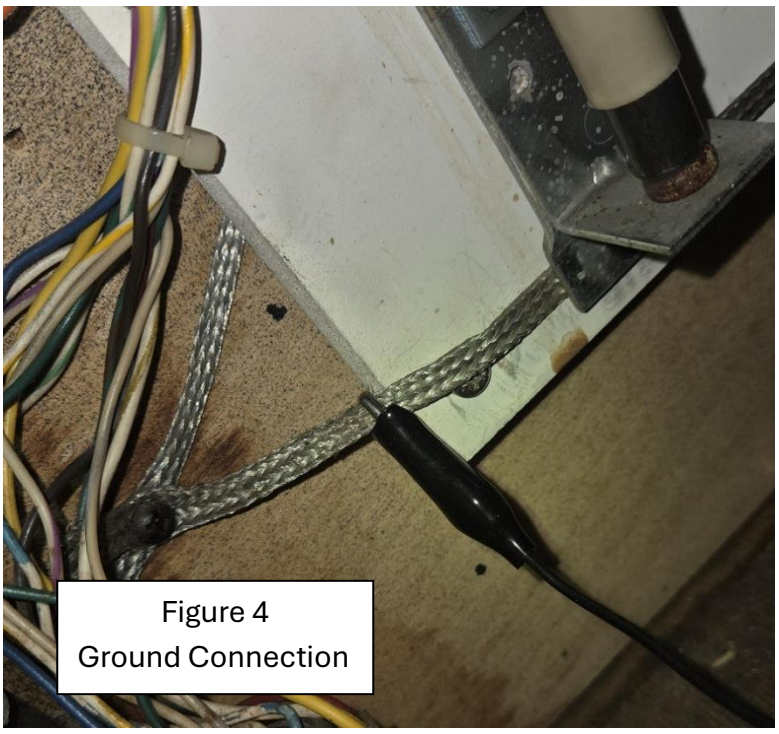

Figure 4
Ground Connection

**Step 2:** Connect the ball drain blue and white wire clips to the drain switch

**Option** one (Williams and Gottlieb games. For Bally games skip to option 2).

This option uses the BallSaver built-in sensor to indicate correct connections to the drain switch for Williams and Gottlieb games

2.1 On the BallSaver board, turn the game switch to the "Game W" (up) position. See figure 5.

2.2 On the BallSaver board, slide DIP switch #4 to the down ("0"). the blue position

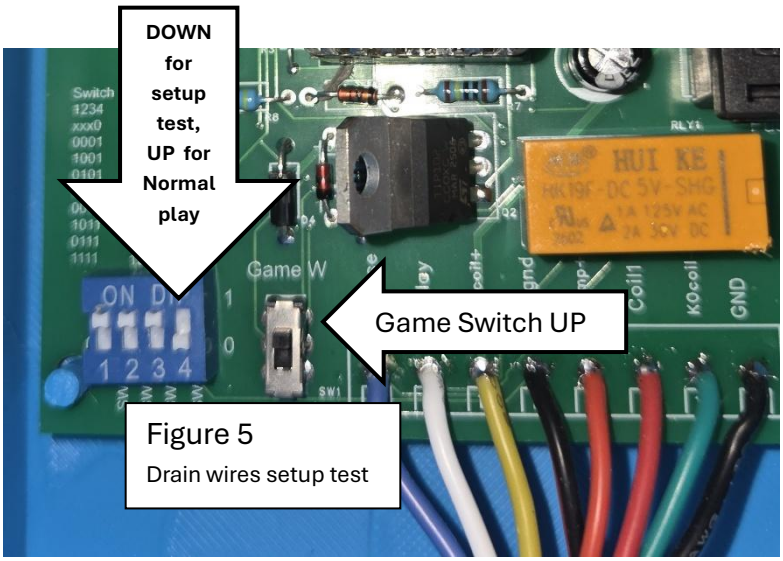


Figure 5
Drain wires setup test

2.3 Now find the drain ball switch in the lower playfield. The drain ball switch is the switch that a ball first hits after draining. Attach the blue wire clip directly to one of the two solder lugs that are connected to the switch (A or B). Be sure to connect directly to the switch lug if a diode is present and not to the diode side to which wires are connected back to the machine (Not to C). Sometimes the drain switch will have an extra lug, as in Figure 6, which is used only for connection between the diode and wires back to the machine (C). Also, be certain that the blue wire clip is electrically connected since an incomplete

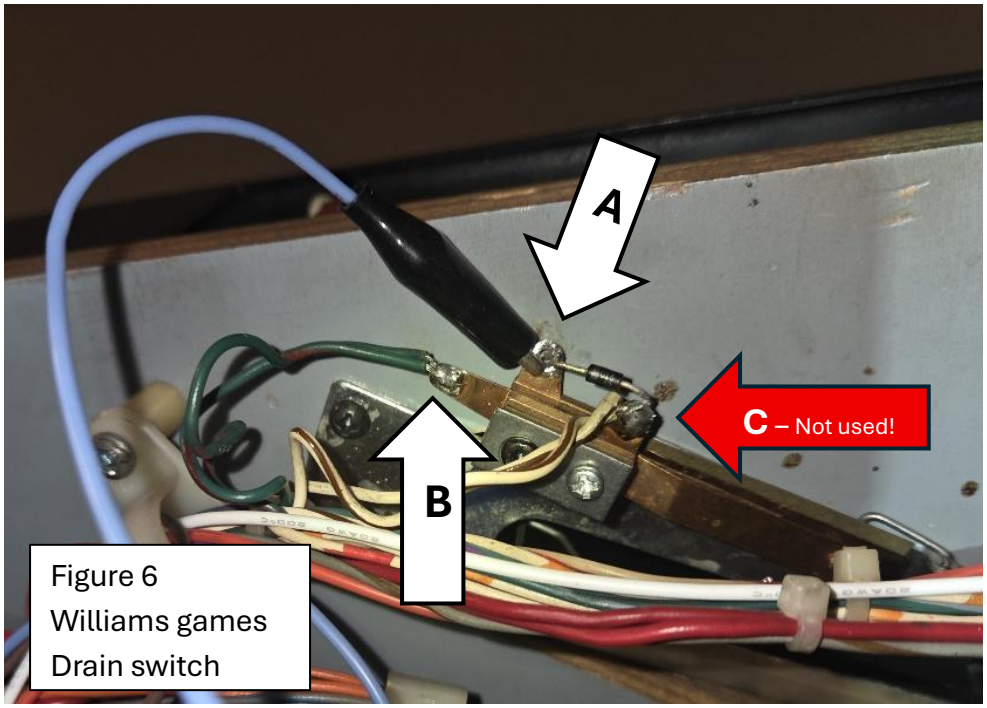


Figure 6
Williams games
Drain switch

connection will yield false results. See Figure 6. * A Williams game switch is shown, but others are similar except for diode location.

2.4 With the green and yellow wire clips connected to the kickout coil, the black wire clip connected to ground, and the blue wire connected to one side of the drain switch (A or B), turn the game power back on and start a game. Leave the ball in the outlane.

2.5 Watch the Status LED light on the BallSaver. See Figure 7. It will start out to be white and then change to either red or green. Ignore the smaller red power LED. If the blue wire clip is on the correct side of the switch, you should see a blinking green Status LED. If you see a blinking red LED, move the blue clip to the other side of the drain switch (to A or B). If neither side indicate a with a green LED, skip to Option two below. Only one side of the drain switch for a Williams or Gottlieb game should yield a blinking green LED. If both sides yield a green LED, make certain that the blue write clip is properly electrically connected to the drain switch solder tabs. If this does not fix the problem, skip to Option two below.

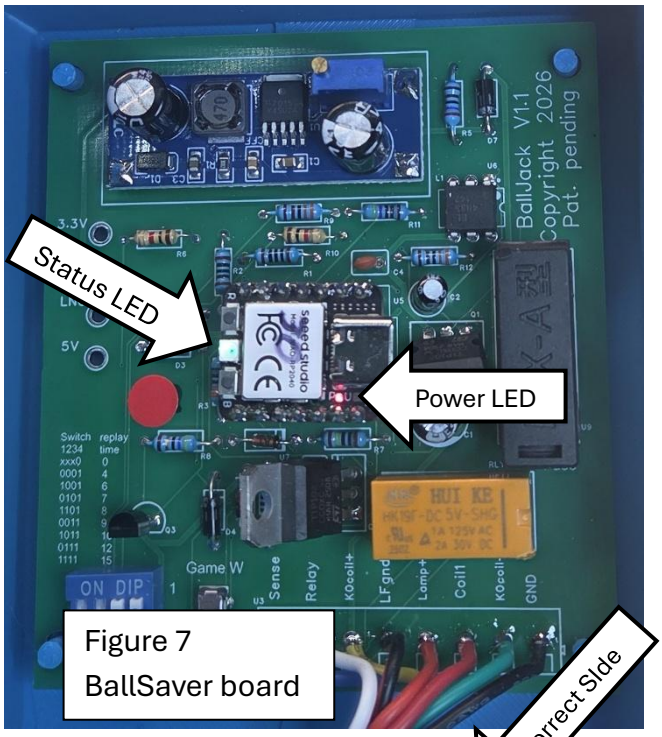

Figure 7
BallSaver board

2.6 With the Ball saver switch in the UP ("W") position and the blue wire clip on the correct side of the drain switch, turn off the game power.

2.7 Leaving the blue clip in place, using a wire cutter, cut the lead to that side of the switch and attach the white clip to the cut lead. See Figure 8. In this figure, The white wire is connected to the side that was originally connected to the location of the blue wire.

2.8 Return dip switch 4 on the BallSaver up to the "ON" position ("1"). (See Figure 5). Proper game operation of the BallSaver requires that dipswitch 4 be in the "ON" position.

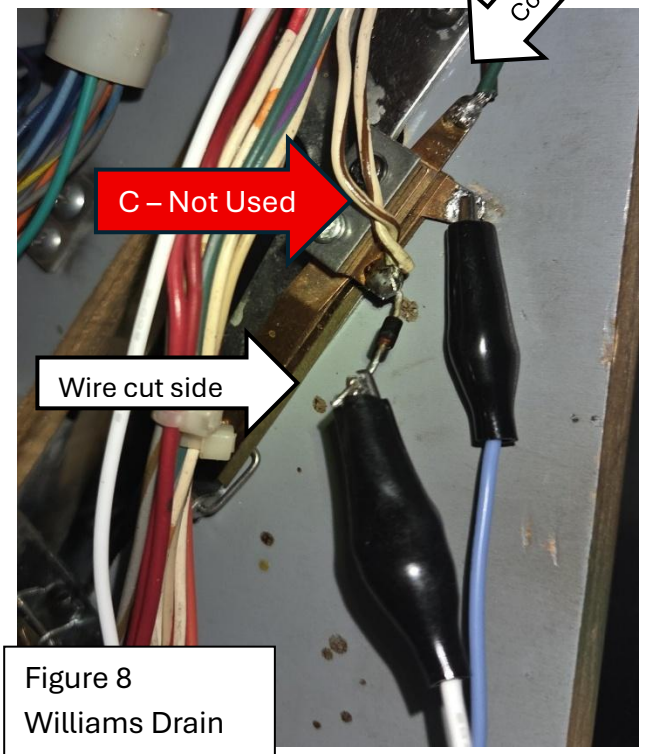

Figure 8
Williams Drain

**Option two:** (For Bally and games where the automated side finder in Option one does not work):

2.1 Position the on-board slide switch inside the BallSaver device to "Game-W " for normally high switch strobe games. Many Williams and Gottlieb games have normally high strobes. A normally high strobe means that the pinball computer sends a constant high voltage to the switch but occasionally checks to see if the switch is closed by changing to zero voltage. Position the BallSaver slide switch to "Game-B" for normally low strobes option found in Bally games. See the Figure 5 for the game switch location and Figure 13 (at end of document) for different game options or for more information. If you select the incorrect switch side, the Ball saver will not operate correctly.

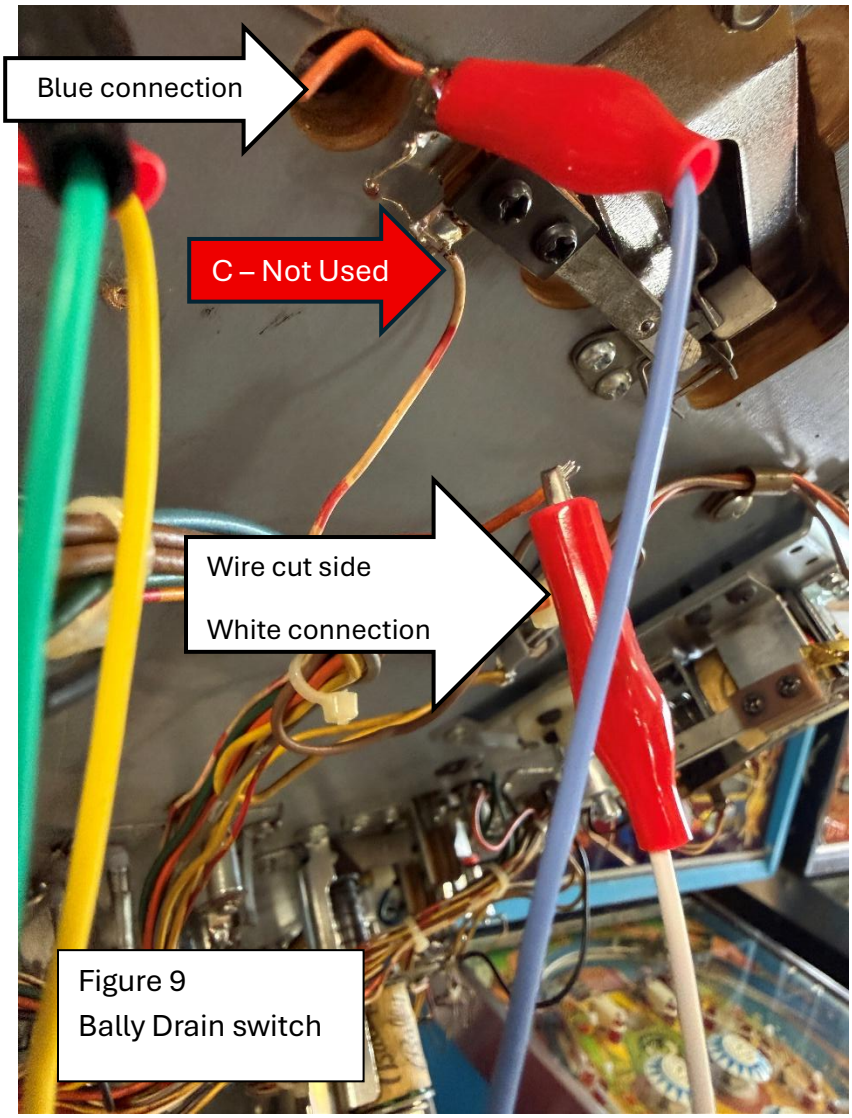

Figure 9
Bally Drain switch

2.2 Find the drain ball switch in the lower playfield and cut the appropriate wire as shown in the diagram in Figure 11. The drain ball switch is the switch that a ball first hits after draining. See Figures 8 or 9 for more details on attaching the white and blue clips. Note that the blue clip always attaches to the switch and the white to the original switch connection.

**Step 3**: Select the ball replay time of your choice using the first three dip switches on the BallSaver board. (see Figure 4). The BallSaver device is shipped set for 9 seconds replay time. Alternate times and switch settings are printed on the circuit board. Note that replay time starts as soon as the ball enters the outlane. Dip Switch 4 must remain in the "ON" ("1") position for proper game play. Changes in the Dip switch settings should only be made with the game power off, or else they will not take effect.

**Step 4**: Attach the flasher LED from the BallSaver box to the playfield light hole of your choice using the provided wire tie so the flashing can be seen by looking at the playfield. When the LED is flashing, drained balls will be returned. See Figure10.

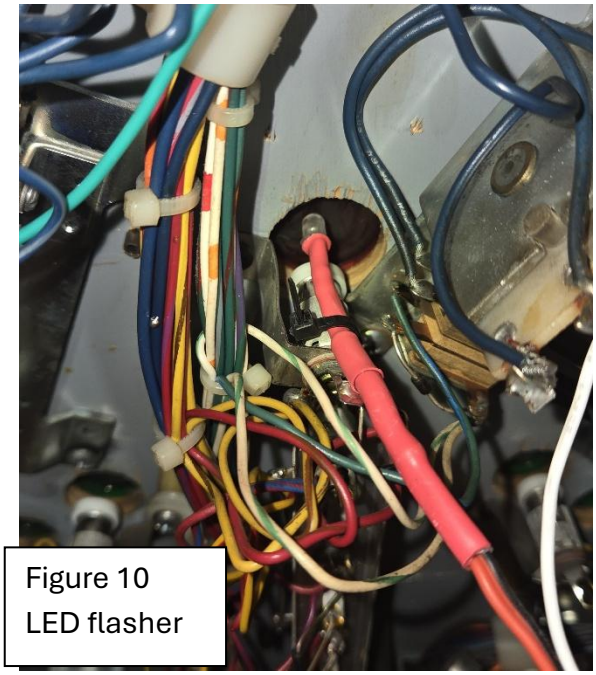

Figure 10
LED flasher

**Step 5**: Attach the remaining clip lead if needed (typically for multi-ball machines). This is required only if there is a separate coil to move the ball from the drain to the kickout coil. See figure 13.

NOTE: You may need to remove the lower playfield metal apron to access some coils. See the "tips" section. When attaching clip leads, be sure the clip touches only the point indicated and not any other circuity or metal.

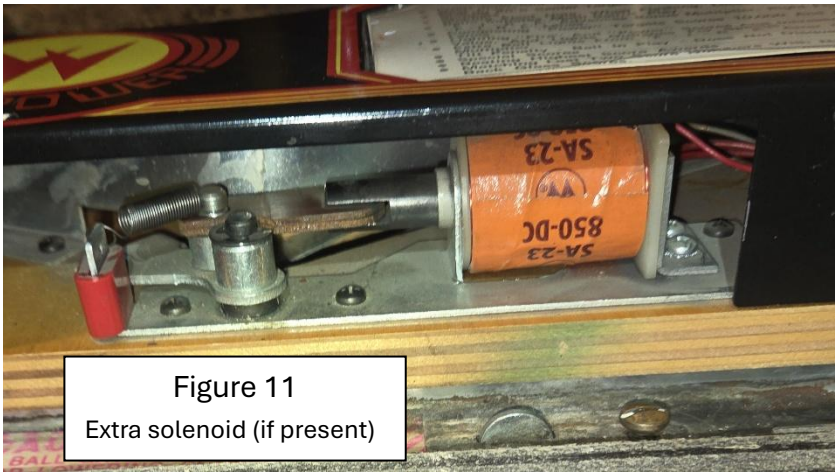


Figure 11
Extra solenoid (if present)

5.1 .Connect the Red wire clip to the drain coil ground switch wire (as in step 1.1 above). Typically included in a multiball game, this coil kicks the ball from the drain to the location where the kickout coil can launch it into the trough. If this coil is not used, do not connect the red wire, but assure that the end clip is insulated from the game. See Figures 11 & 12.

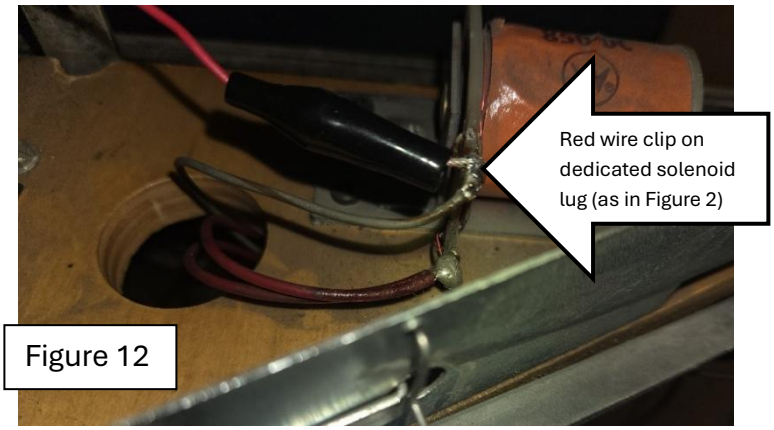


Figure 12

**Step 6**: Turn the game power on. Once the game power is on, the Status LED inside the BallSaver box should light along with the red Power LED. Snap on the box lid

and attach the BallSaver box to playfield, sidewall, or bottom of pinball machine. The Status LED inside the box will change colors depending on the game status.

Your machine should work now with the BallSaver in place. See the troubleshooting section at the end of this document if problems occur. NOTE: DO NOT touch any other parts of the Ball Jack circuity. Adjustments other than those described above may cause the unit to fail. The warranty is not valid for devices which have been altered. Once again, we are not responsible for any damage to your machine encountered during the installation of this device.

**Mounting:** BallSaver is designed to set on the pinball floor. If you'd prefer to attach it to the underside of the playfield, screw tabs are provided.

**TIPS:**

- To remove the metal apron on the top of the lower playfield, carefully remove the locking bar and glass.set the glass in a safe location on a soft surface to prevent breakage. Look for two screws attached to the lower playfield brackets and remove them. Slide the apron up toward the rear of the machine and lift up and off.
- You might want to consider taping the wires and clips to insolate them as well as to prevent them from disconnecting.
- The clip leads may be difficult to install by squeezing them with the plastic shields fully extended. If this is the case, try retracting the covers a bit during installation but be sure to re-extend the shields to fully cover the clips before completing your installation.
- Once you are certain that the BallSaver is properly connected and works to your satisfaction, the clips can be replaced with soldered connections if you are capable.
- Note that while the built-in wiring check in option one of step 2 is a great help in identifying correct wiring locations, if the blue wire clip is not connected properly, or if it is on the incorrect side of a diode which is attached to the drain switch, the BallSaver will not report correctly. Be certain that the blue wire clip is connected directly to one side of the drain switch or the other and NOT through the diode. See Figure 6. This wiring check typically will work only for Williams and Gottlieb games.
- Changes to the time delay Dip switch should only be made with the game power off in order for them to take effect. Ball saver computer does not read the switch once power is applied for more than a few seconds.

**Trouble shooting:**

- No LED lights on BallSaver CPU board on powerup – check connections on the kickout coil and black ground wire. Check fuse in Ball Jack box. Kickout and drain coil connections must be to correct coil lugs. The BallSaver power comes from the coil and ground connections.
- Coils fire randomly – Make sure all clips connect only where specified and not to any other metal areas or wires. Consider taping the clip connections to insulate them,
- Game does not start – Be sure the blue and white wire clips are attached to wires cut at the drain switch. Wire insulation at the point of contact with the clip must be removed.
- Game runs but LED does not flash – Connections to drain switch may be reversed or on wrong side. Check also that the BallSaver board game switch is in the proper position. Use the built-in check in option one of step 2 above to confirm you have the correct configuration

Figure 13

## Connections to the ball drain switch

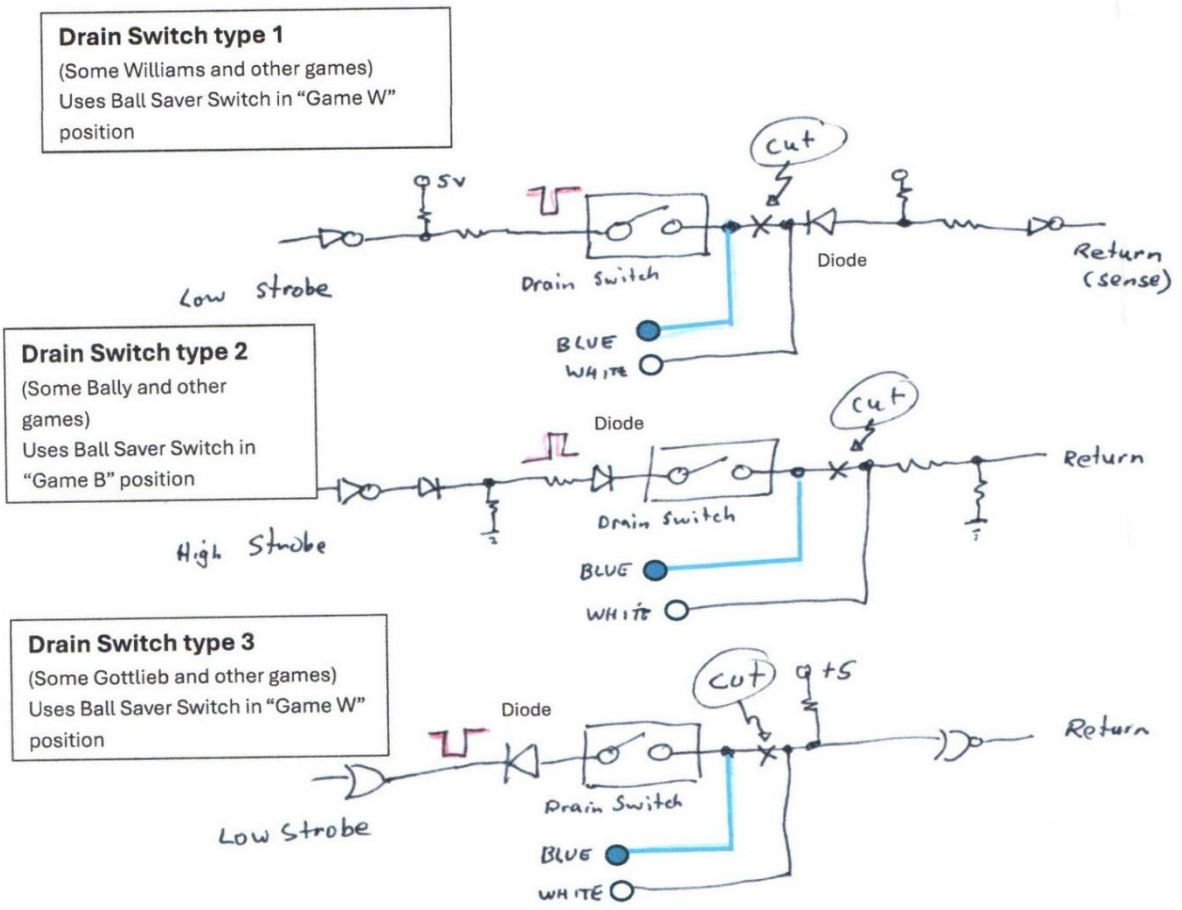


Note that in each case above, the BLUE clip is connected to the return side of the drain switch and the WHITE clip is connected to the remaining portion of the switch connection you just cut. The diodes are always on one side of the switch. The remaining circuitry is typically in the back panel.

---

Note: Liability of product supplier is limited to cost of BallSaver. Do not proceed if you are unsure of connections. V3.1